LNG FUEL (NGV) BULK TANK

TAYLOR - WHARTON INTERNATIONAL LLC

AFT Alternate Fuel Technologies

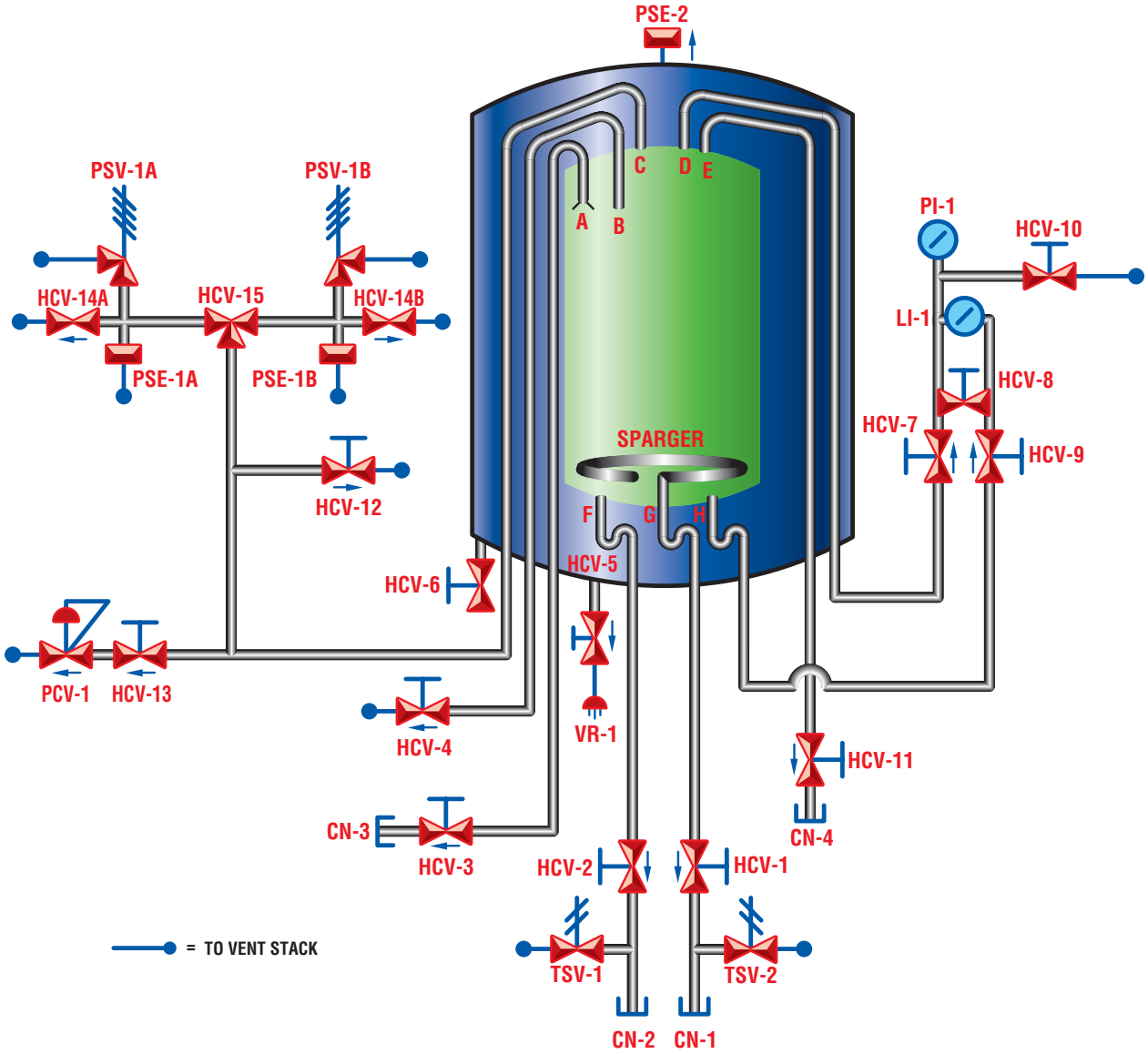

LEGEND

CN-1. BOTTOM RETURN CONNECTION
CN-2. LIQUID WITHDRAW CONNECTION
CN-3. TOP FILL CONNECTION
CN-4. VAPOR CONNECTION
HCV-1. BOTTOM RETURN VALVE
HCV-2. LIQUID WITHDRAW
HCV-3. TOP FILL VALVE
HCV-4. TRYCOCK VALVE
HCV-5. VACUUM PROBE ISOLATION VALVE
HCV-6. VACUUM PUMPOUT VALVE
HCV-7. VAPOR PHASE ISOLATION VALVE
HCV-8. EQUALIZATION VALVE
HCV-9. LIQUID PHASE ISOLATION VALVE
HCV-10. INSTRUMENT CIRCUIT VENT VALVE
HCV-11. VAPOR SHUTOFF VALVE
HCV-12. VAPOR VENT VALVE
HCV-13. VENT REGULATOR SHUTOFF
HCV-14. SAFETY CIRCUIT VENT VALVE
HCV-15. RELIEF SYSTEM DIVERTER VALVE
PSV-1. TANK PRESSURE RELIEF VALVE
TSV-1. THERMAL EXPANSION RELIEF VALVE
TSV-2. THERMAL EXPANSION RELIEF VALVE
PCV-1. VENT REGULATOR
PSE-1. TANK RUPTURE DISK
PSE-2. VACUUM JACKET LIFT PLATE
LI-1. LIQUID LEVEL GAUGE
PI-1. TANK PRESSURE GAUGE
VR-1. VACUUM PROBE

TAYLOR - WHARTON INTERNATIONAL LLC

The People You Know, The Products You Trust

www.twiglobaltech.com
www.taylorwharton.com
www.scicomposites.com

Global Gas Solutions for the 21st Century

Taylor-Wharton

Structural Composites Industries

American Welding & Tank

Sherwood Valve

AFT Alternate Fuel Technologies

American Welding & Tank
www.awtank.com

Taylor-Wharton
www.taylorwharton.com

Taylor-Wharton International
www.twiglobaltech.com

Structural Composites Industries
www.scicomposites.com

Sherwood Valve
www.sherwoodvalve.com

© Copyright 2008, TWI LLC, ALL RIGHTS RESERVED